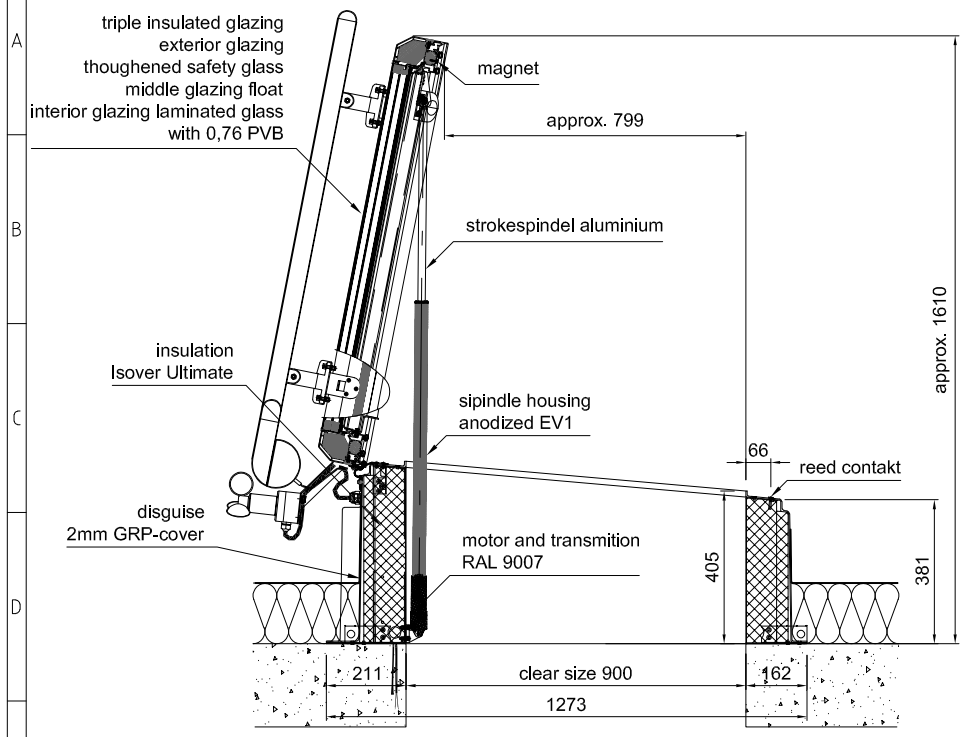


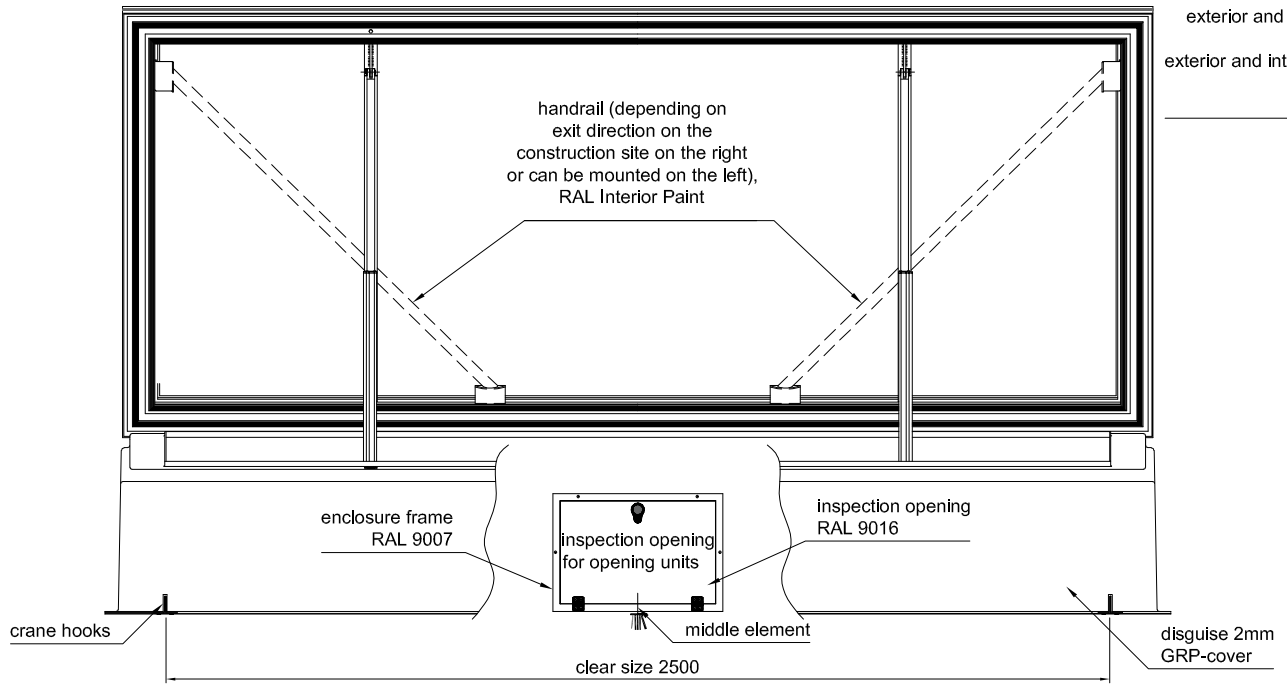


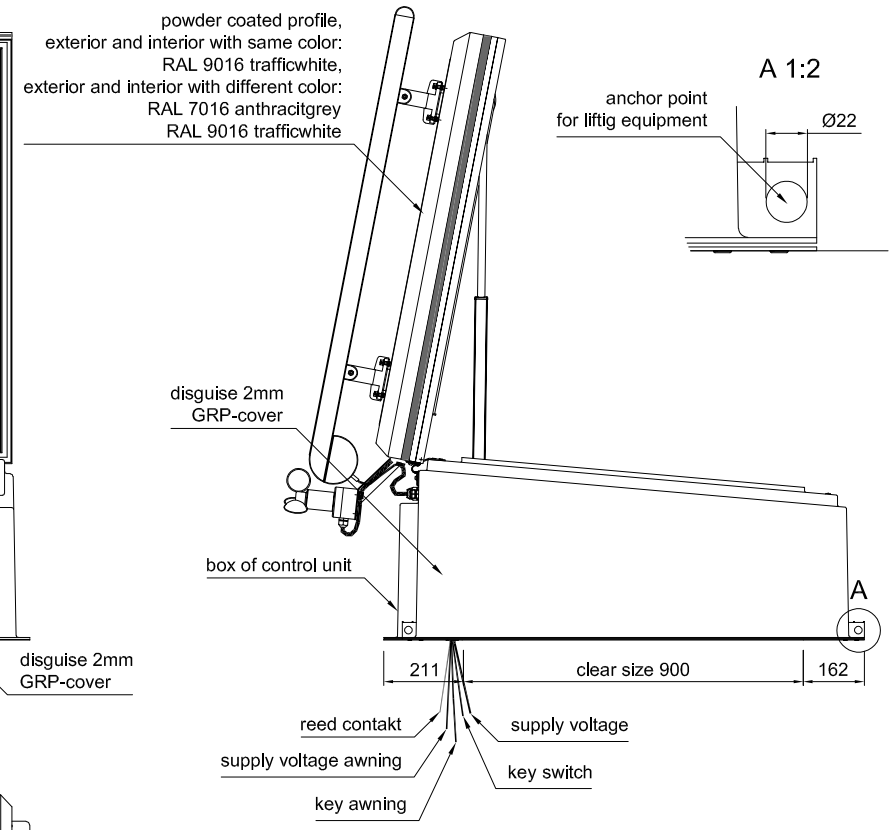


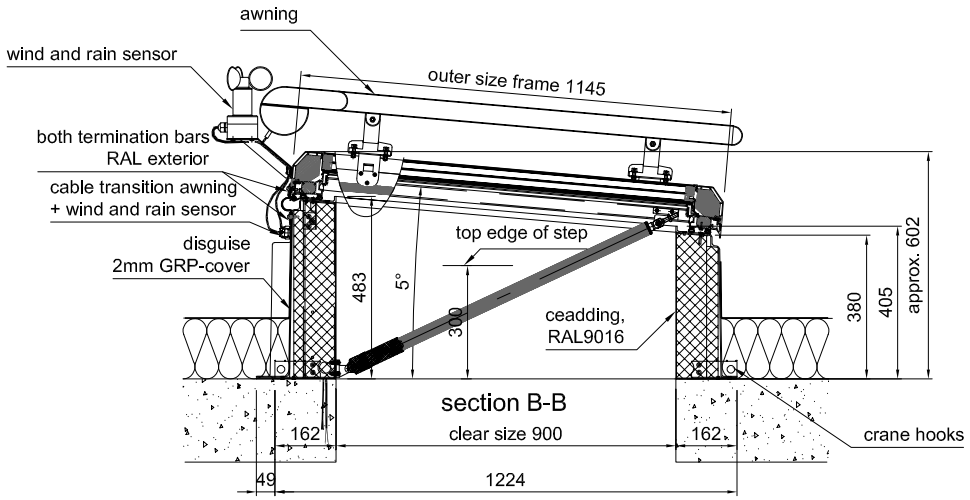


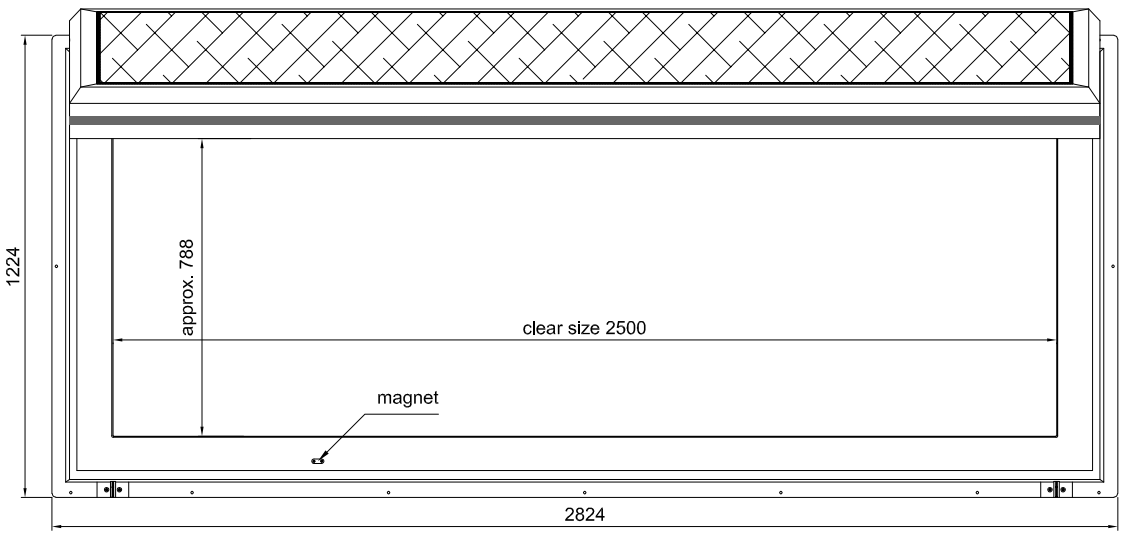


Weight of the overall construction depending on the glazing structure approx. 350 kg

Before attaching the flat roof exit to the substructure, check that the sash seal sits all around between the attachment element and the sash! The misalignment can be corrected by lining the flat roof exit. A later correction (after fastening) is not possible!

Fall protection measures (e.g. railings) are on-site services. The safety distances according to DIN EN 349 to fixed roof structures (railings, walls) must be maintained.

The roof exit is closed and fall-proof in accordance with DIN 18008-6.

Technical changes reserved !

The roof hatch is always opened and closed using a key switch (without self-locking). The use of weather sensors, smartphones, remote controls or similar is not permitted according to the risk assessment in accordance with the EC Machinery Directive!! The exit area must be completely visible from the operating position.

Depending on the planned staircase, the handrail should be present. If necessary, the handrail supplied can be installed. A telescopic handrail provided by the customer can also be used.

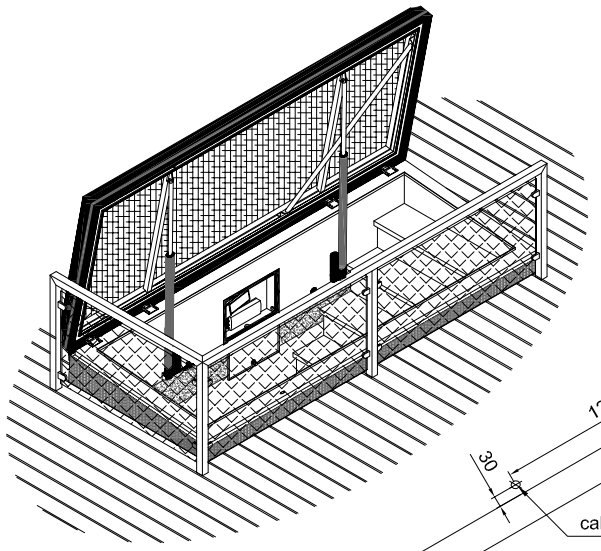

The surface for the attachment element must be horizontal all around!

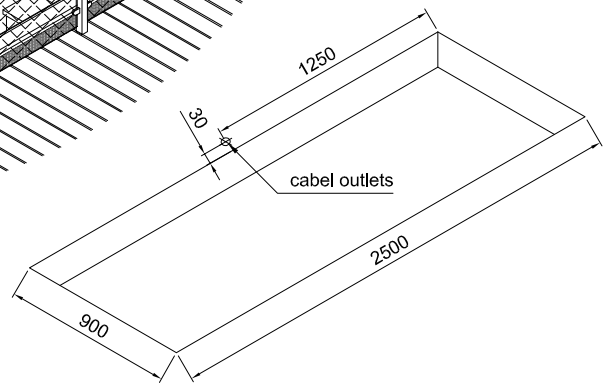


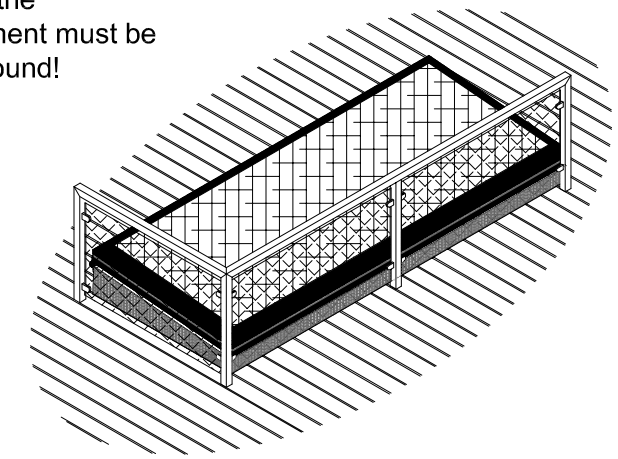

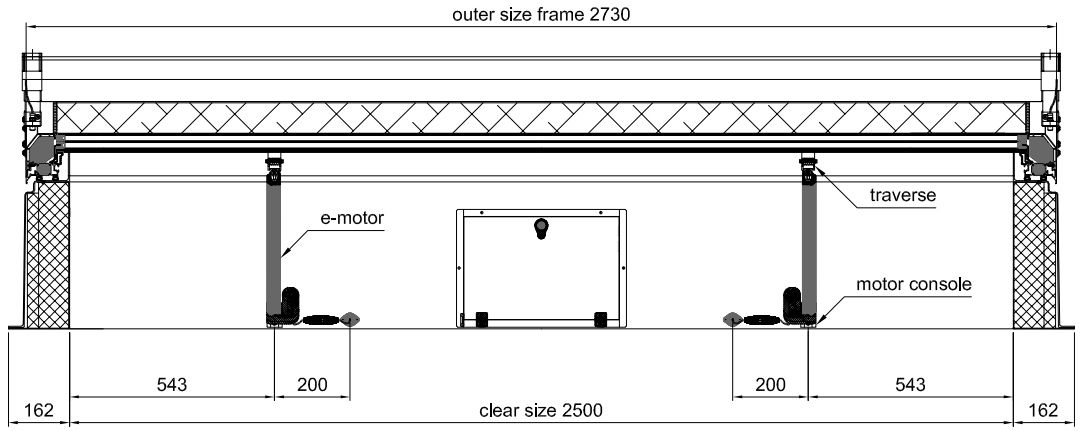


welding seam:
Execution of visible welds according to DIN EN ISO 10042 Limits for Irregularities table 1 Rating groups C
execution class EXC2

Test measurements: ☐ function depends on compliance with these test

Tolerances: ISO 2768-v DIN EN ISO 13920 AE

| | Date | Name |
|---|---|---|
| Drafted | 26.06.2026 | Kögler |
| Checked | | |

Heinrich Strunz GmbH
Zehstraße 2
95111 Rehau/Bayern
Tel.: (09283) 595-0
Fax: (09283) 595-290

Scale: 1:10

Material

EDV No.

Flat Roof Access Service FE
OKD 090x250 cm
Planning drawing
awning

Drawing no.: 5.1.1.3.2.7.3.1. PZ-Service-FE 090x250cm

Das Urheberrecht an dieser Zeichnung ist gemäß dem Gesetz über Urheberrechte und verwandte Schutzrechte von 9.9.1965 geschützt. Jegliche Verwertung dieser Zeichnung, insbesondere die Vervielfältigung und Weitergabe an Dritte bedarf unserer ausdrücklichen Genehmigung. Lamilux Heinrich Strunz GmbH, Zehstr. 2, 95111 Rehau